THE DRAWING ON THIS PRINT AND THE INFORMATION THEREIN ARE PROPRIETARY TO JENOPTIK OPTICAL SYSTEMS, LLC AND SHALL NOT BE USED IN WHOLE OR IN PART WITHOUT THE WRITTEN CONSENT OF JENOPTIK OPTICAL SYSTEMS, LLC.

RELEASED

ASSEMBLY USED ON:	LEVEL
-	1

REVISION HISTORY

ZONE & EC NO	REV	DESCRIPTION	DATE	APPROVED
BOM/15215-01	A	REV TO ITEM 4	9/3/2015	D.SYKORA

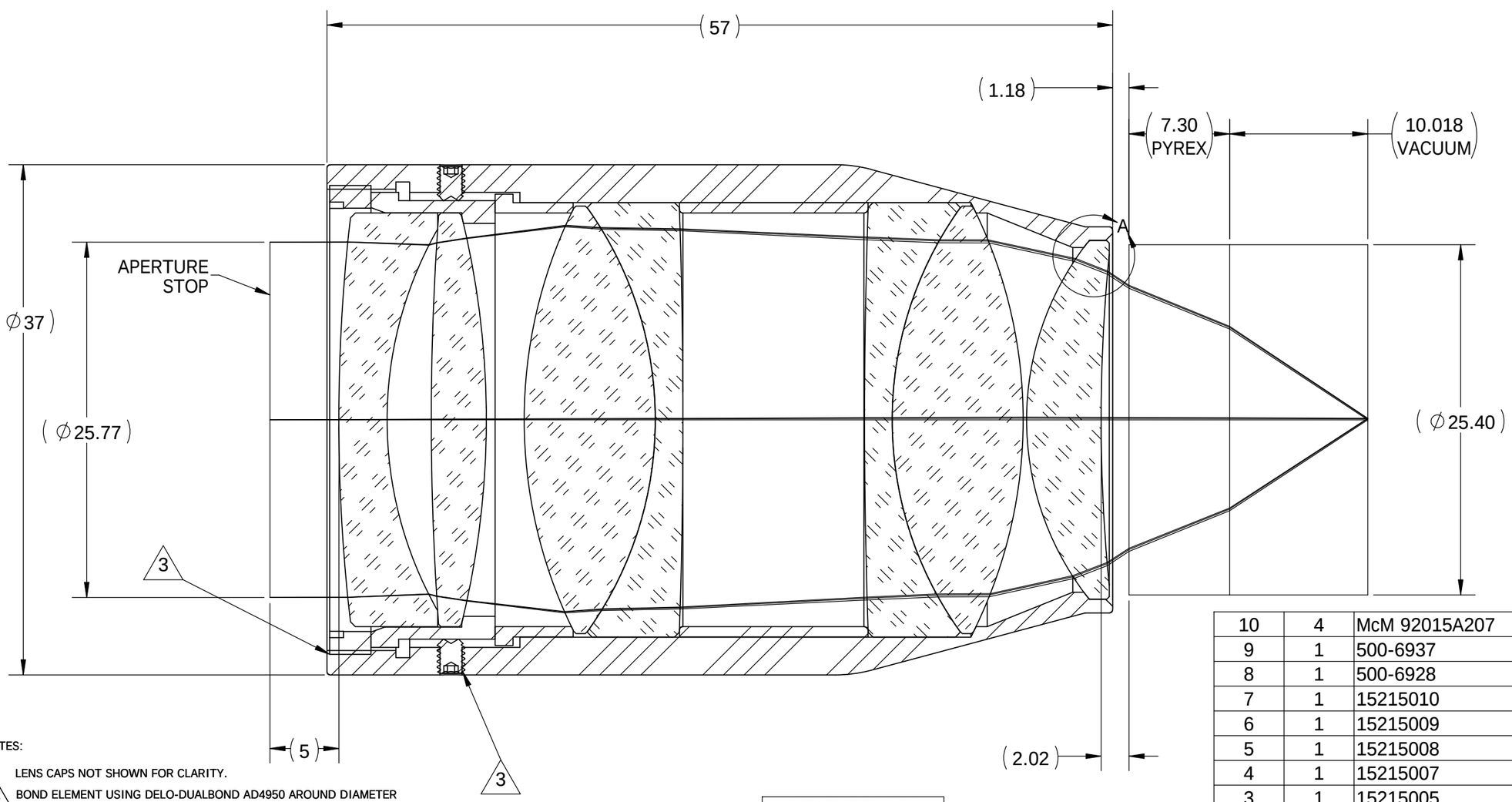

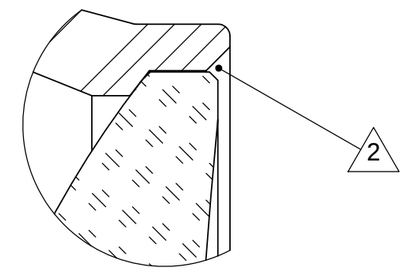

DETAIL A

NOTES:

1 LENS CAPS NOT SHOWN FOR CLARITY.

2 BOND ELEMENT USING DELO-DUALBOND AD4950 AROUND DIAMETER AFTER ALL ADJUSTMENTS ARE COMPLETE.

3 STAKE WHERE NOTED USING 3M 2216 EPOXY AFTER ALL ADJUTMENTS ARE COMPLETE

ITEM	QTY.	PART NUMBER	REV	DESCRIPTION
10	4	McM 92015A207	-	SET SCRW M2 X 0.4 X 2.5L SS
9	1	500-6937	-	LENS CAP Ø37 MM, PUSH ON
8	1	500-6928	-	LENS CAP Ø28 MM, PUSH ON
7	1	15215010	-	RETAINER
6	1	15215009	-	SPACER, 2-3
5	1	15215008	-	SPACER, 4-4
4	1	15215007	A	HOUSING
3	1	15215005	-	ELEMENT 5
2	2	15215006	-	DOUBLET 3/4
1	1	15215012	-	SUB-ASSY 1-2

DESIGN SPECIFICATIONS	
NA	0.55
EFL	23.37 MM @ 852 NM
FOV	0.150 X 0.150 MM
WL BANDS	470-490 NM 820-852 NM 895-920 NM
MAGNIFICATION	INFINITE CONJUGATES
WORKING DISTANCE	1.0 MM AIR + 7.3 MM PYREX + 10 MM VACUUM

DECENTER MM	
ELEMENT	DECENTER
1/2	± 0.025
3/4	± 0.025
3/4	± 0.025
5	± 0.025

AIRSPACE MM	
ELEMENTS	AIRSPACE
2-3	2.747 ± 0.05
4-4	13.172 ± 0.05
3-5	0.25 ± 0.05

MAT'L:
AS BUILT

FINISH:
-
N/A
-

BREAK ALL SHARP CORNERS R 0.25 MM MIN

SURFACE TEXTURE 1.6 UNLESS OTHERWISE SPECIFIED

	NAME	DATE
DRAWN	T.VICTORIO	7/31/2015
CHECKED	T.VICTORIO	8/6/2015
APRVD	T.DESLIS	8/7/2015

UNLESS OTHERWISE SPECIFIED DIMENSIONS ARE IN MILLIMETERS AND INCLUDE APPLIED FINISH TOLERANCES. INTERPRET ALL DIMENSIONS AND TOLERNACES PER ASME Y14.5 2009

TOLERANCE ON ANGLES = ± 0.25°

LINEAR DIM X = ± 0.5
X.X = ± 0.2
X.XX = ± 0.1
X.XXX = ± 0.05

HOLE DIM X = ± 0.5
X.X = ± 0.2
X.XX = ± 0.1
X.XXX = ± 0.05

JENOPTIK Optical Systems, LLC
16490 Innovation Drive | Jupiter, FL 33478-6428
Phone: 561 881-7400 | Fax: 561 881-1947
www.jenoptik-inc.com

TITLE
OBJECTIVE LENS NA 0.55

SIZE B | DWG NO 15215000 | REV A

WEIGHT: 95.47 | SHEET 1 OF 2

THE DRAWING ON THIS PRINT AND THE INFORMATION THEREIN ARE PROPRIETARY TO JENOPTIK OPTICAL SYSTEMS, LLC AND SHALL NOT BE USED IN WHOLE OR IN PART WITHOUT THE WRITTEN CONSENT OF JENOPTIK OPTICAL SYSTEMS, LLC.

RELEASED

ASSEMBLY USED ON:	LEVEL
-	1

REVISION HISTORY

ZONE & EC NO	REV	DESCRIPTION	DATE	APPROVED

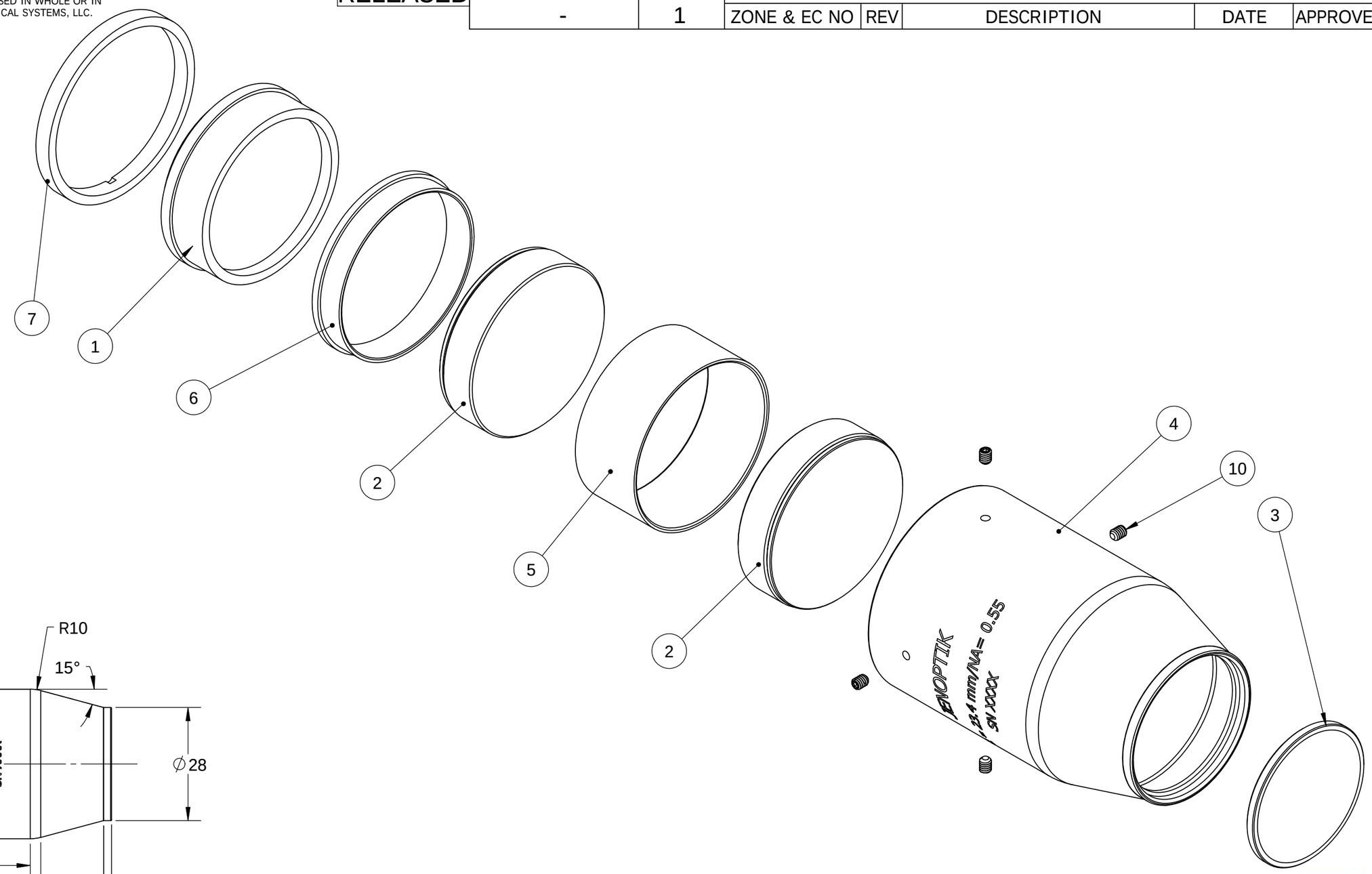

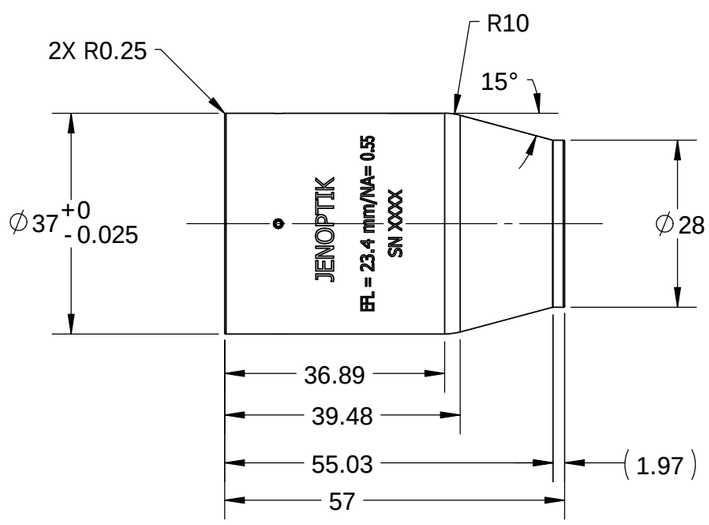

SCALE 1:1

MAT'L:		NAME	DATE
AS BUILT	DRAWN	T.VICTORIO	7/31/2015
FINISH:	CHECKED	T.VICTORIO	8/6/2015
-	APRVD	T.DESLIS	8/7/2015
N/A			
-			

BREAK ALL SHARP CORNERS R 0.25 MM MIN

SURFACE TEXTURE 1.6 UNLESS OTHERWISE SPECIFIED

UNLESS OTHERWISE SPECIFIED DIMENSIONS ARE IN MILLIMETERS AND INCLUDE APPLIED FINISH TOLERANCES. INTERPRET ALL DIMENSIONS AND TOLERNACES PER ASME Y14.5 2009

TOLERANCE ON ANGLES = ± 0.25°

LINEAR DIM		HOLE DIM	
X	± 0.5	X	± 0.5
X.X	± 0.2	X.X	± 0.2
X.XX	± 0.1	X.XX	± 0.1
X.XXX	± 0.05	X.XXX	± 0.05

JENOPTIK Optical Systems, LLC
16490 Innovation Drive | Jupiter, FL 33478-6428
Phone: 561 881-7400 | Fax: 561 881-1947
www.jenoptik-inc.com

TITLE

OBJECTIVE LENS NA 0.55

SIZE	DWG NO	REV
B	15215000	A

WEIGHT: 95.47

SHEET 2 OF 2